ORDER NO. ARD-8003021C

Service Manual

Cassette Deck

RS-M5

(Silver Face / Black Face)

Metal Tape Compatible Cassette Deck
with Full Auto-Stop

DOLBY SYSTEM

This is the Service Manual for the following areas.
D ····· For All European areas except United Kingdom.
B ····· For United Kingdom.

RS-631 MECHANISM SERIES

Specifications

Power requirement:	AC; 110/220 V, 50-60 Hz for All European areas except United Kingdom AC; 240 V, 50-60 Hz for United Kingdom
Power consumption:	10 W
Motor:	Electronic control DC motor
Track system:	4-track 2-channel stereo recording and playback
Tape speed:	4.8 cm/s
Wow and flutter:	0.07% (WRMS), ±0.20% (DIN)
Frequency response:	Metal tape; 20 – 17,000 Hz 30 – 16,000 Hz (DIN) CrO_2 tape; 20 – 16,000 Hz 30 – 15,000 Hz (DIN) Normal tape; 20 – 15,000 Hz 30 – 13,000 Hz (DIN)
Signal-to-noise ratio:	Dolby* NR in; 66 dB (above 5 kHz) Dolby NR out; 56 dB (signal level = max. recording level, CrO_2 type tape)
Fast forward and rewind time:	Approx. 86 seconds with C-60 cassette tape
Inputs:	MIC; sensitivity 0.25 mV, input impedance 10 kΩ over applicable microphone impedance 400Ω – 10 kΩ LINE; sensitivity 60 mV, input impedance 47 kΩ
Outputs:	LINE; output level 420 mV, output impedance 1.4 kΩ or less, load impedance 22 kΩ over HEADPHONE; output level 60 mV, load impedance 8 Ω
Rec/pb connection:	5 P DIN type; input sensitivity 0.25 mV, impedance 6.0 kΩ, output level 420 mV, impedance 5.0 kΩ
Bias frequency:	80 kHz
Heads:	2-head system; 1-MX head for record/playback, 1-double-gap ferrite head for erasure
Dimensions:	41.0 cm (W) × 14.2 cm (H) × 20.5 cm (D)
Weight:	4.0 kg

Specifications are subject to change without notice.
* 'Dolby' and the double-D symbol are trademarks of Dolby Laboratories.

Technics

Matsushita Electric Trading Co., Ltd.
P.O. Box 288, Central Osaka Japan

ORDER NO. ARD-8003021C

Service Manual

Cassette Deck

RS-M5

(Silver Face / Black Face)

Metal Tape Compatible Cassette Deck
with Full Auto-Stop

DOLBY SYSTEM

This is the Service Manual for the following areas.
D ····· For All European areas except United Kingdom.
B ····· For United Kingdom.

RS-631 MECHANISM SERIES

Specifications

Power requirement:	AC; 110/220 V, 50-60 Hz for All European areas except United Kingdom AC; 240 V, 50-60 Hz for United Kingdom
Power consumption:	10 W
Motor:	Electronic control DC motor
Track system:	4-track 2-channel stereo recording and playback
Tape speed:	4.8 cm/s
Wow and flutter:	0.07% (WRMS), ±0.20% (DIN)
Frequency response:	Metal tape; 20 – 17,000 Hz 30 – 16,000 Hz (DIN) CrO_2 tape; 20 – 16,000 Hz 30 – 15,000 Hz (DIN) Normal tape; 20 – 15,000 Hz 30 – 13,000 Hz (DIN)
Signal-to-noise ratio:	Dolby* NR in; 66 dB (above 5 kHz) Dolby NR out; 56 dB (signal level = max. recording level, CrO_2 type tape)
Fast forward and rewind time:	Approx. 86 seconds with C-60 cassette tape
Inputs:	MIC; sensitivity 0.25 mV, input impedance 10 kΩ over applicable microphone impedance 400Ω – 10 kΩ LINE; sensitivity 60 mV, input impedance 47 kΩ
Outputs:	LINE; output level 420 mV, output impedance 1.4 kΩ or less, load impedance 22 kΩ over HEADPHONE; output level 60 mV, load impedance 8Ω
Rec/pb connection:	5 P DIN type; input sensitivity 0.25 mV, impedance 6.0 kΩ output level 420 mV, impedance 5.0 kΩ
Bias frequency:	80 kHz
Heads:	2-head system; 1-MX head for record/playback 1-double-gap ferrite head for erasure
Dimensions:	41.0 cm(W) × 14.2 cm(H) × 20.5 cm(D)
Weight:	4.0 kg

Specifications are subject to change without notice.
* 'Dolby' and the double-D symbol are trademarks of Dolby Laboratories.

Technics

Matsushita Electric Trading Co., Ltd.
P.O. Box 288, Central Osaka Japan

CONTENTS

ITTEM	PAGE
LOCATION OF CONTROLS AND COMPONENTS	1
DISASSEMBLY INSTRUCTIONS	2
ASSEMBLY INSTRUCTIONS	3
ADJUSTMENT PARTS LOCATION	3
MEASUREMENT AND ADJUSTMENT METHODS	4—6
SCHEMATIC DIAGRAM	7
WIRING CONNECTION DIAGRAM	8
ELECTRICAL PARTS LOCATION	9
EXPLODED VIEWS	9, 10
CABINET PARTS	11

LOCATION OF CONTROLS AND COMPONENTS

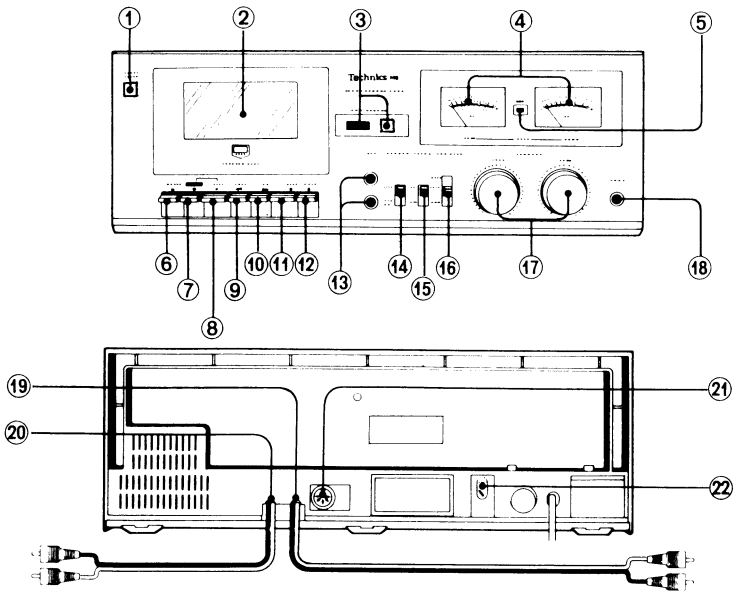

Fig. 1

① **Power switch** (power)
② **Cassette holder**
③ **Tape counter and Reset button** (tape counter)
④ **VU meters** (left-level-right)
⑤ **Recording indication lamp** (rec)
⑥ **Pause button** (pause) (❚❚)
⑦ **Record button** (record) (○)
⑧ **Play button** (play) (▶)
⑨ **Rewind button** (rew) (◀◀)
⑩ **Fast forward button** (ff) (▶▶)
⑪ **Stop button** (stop) (■)
⑫ **Eject button** (eject) (▲)
⑬ **Microphone jacks** (mic)(left/right)
⑭ **Input selector** (input select)
⑮ **Dolby noise-reduction switch** (Dolby NR)
⑯ **Tape selector** (tape select)
⑰ **Input level controls** (left/input level/right)
⑱ **Headphones jack** (phones)
⑲ **Line input cord** (LINE IN)
⑳ **Line output cord** (LINE OUT)
㉑ **Record/playback connection socket** (REC/PLAY)
㉒ **Voltage selector** (VOLTAGE SELECTOR)

DISASSEMBLY INSTRUCTIONS

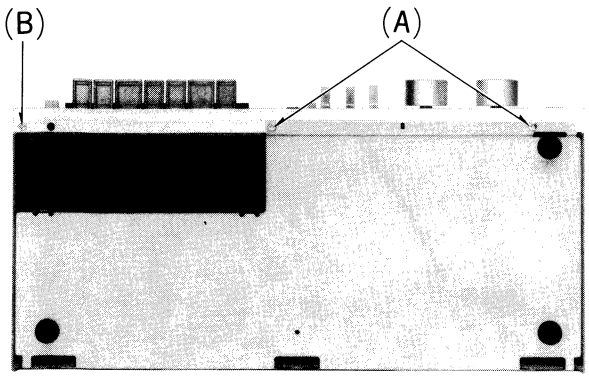

Fig. 2

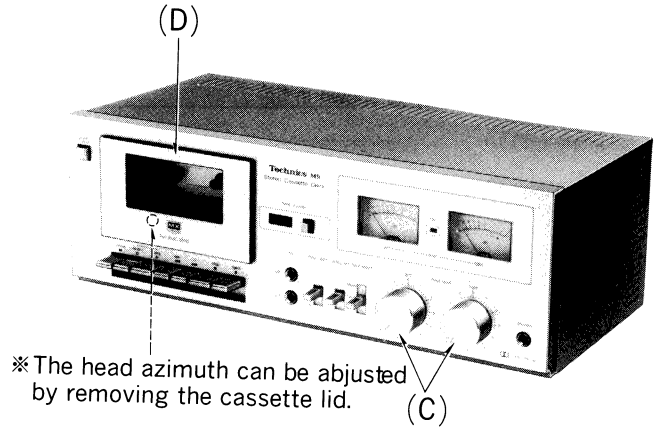

Fig. 3

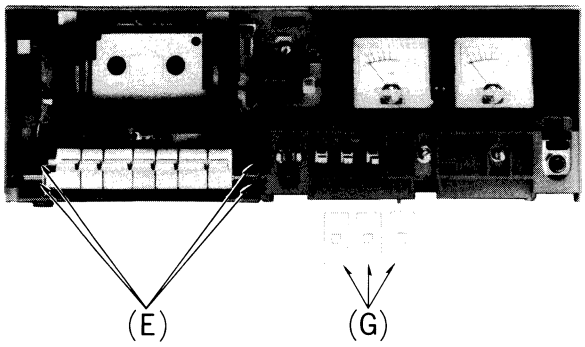

Fig. 4

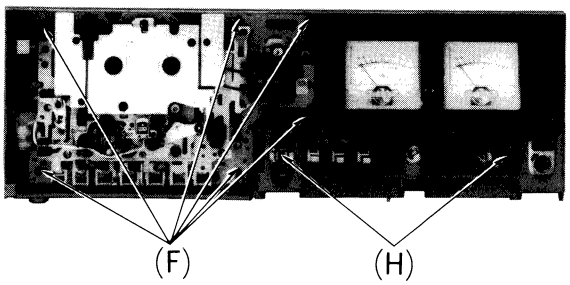

Fig. 5

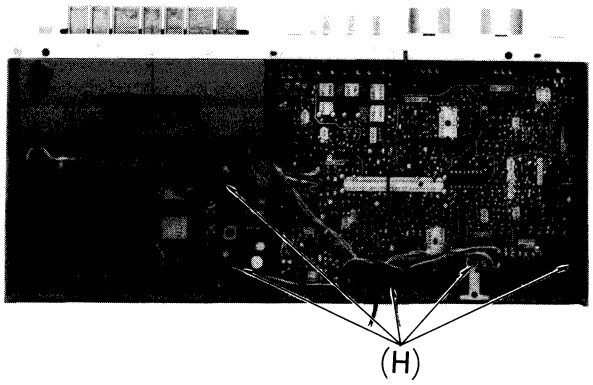

Fig. 6

Procedure	To remove ——.	Remove ——.	Shown in fig. ——.
1	Bottom cover	• 2 screws ····· (A)	2
2	Front panel	• 1 screw ····· (B) • 2 control knobs ····· (C) • Cassette lid ····· (D)	2 3 3
3	Operation button assembly and cassette holder	• 4 red screws ····· (E)	4
4	Mechanism	• 6 red screws ····· (F)	5
4	Main circuit board and oscillation circuit board	• 3 switch shelters ····· (G) • 7 screws ····· (H)	4 5, 6

ASSEMBLY INSTRUCTIONS

Caution:

Repair the cassette deck in its upright condition, as shown in fig. 7.
When mounting the main circuit board, lift the recording lever-A in the direction of the arrow, as shown in fig. 7.

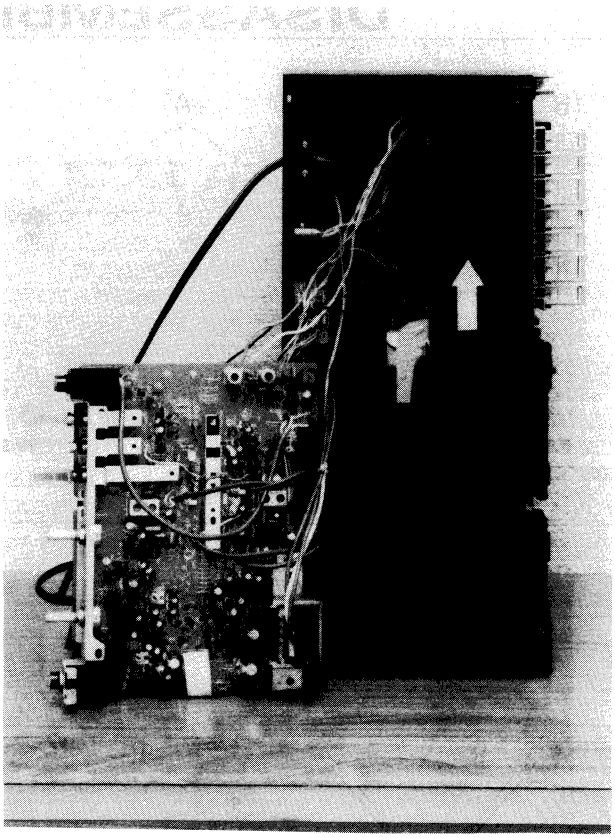

Fig. 7

ADJUSTMENT PARTS LOCATION

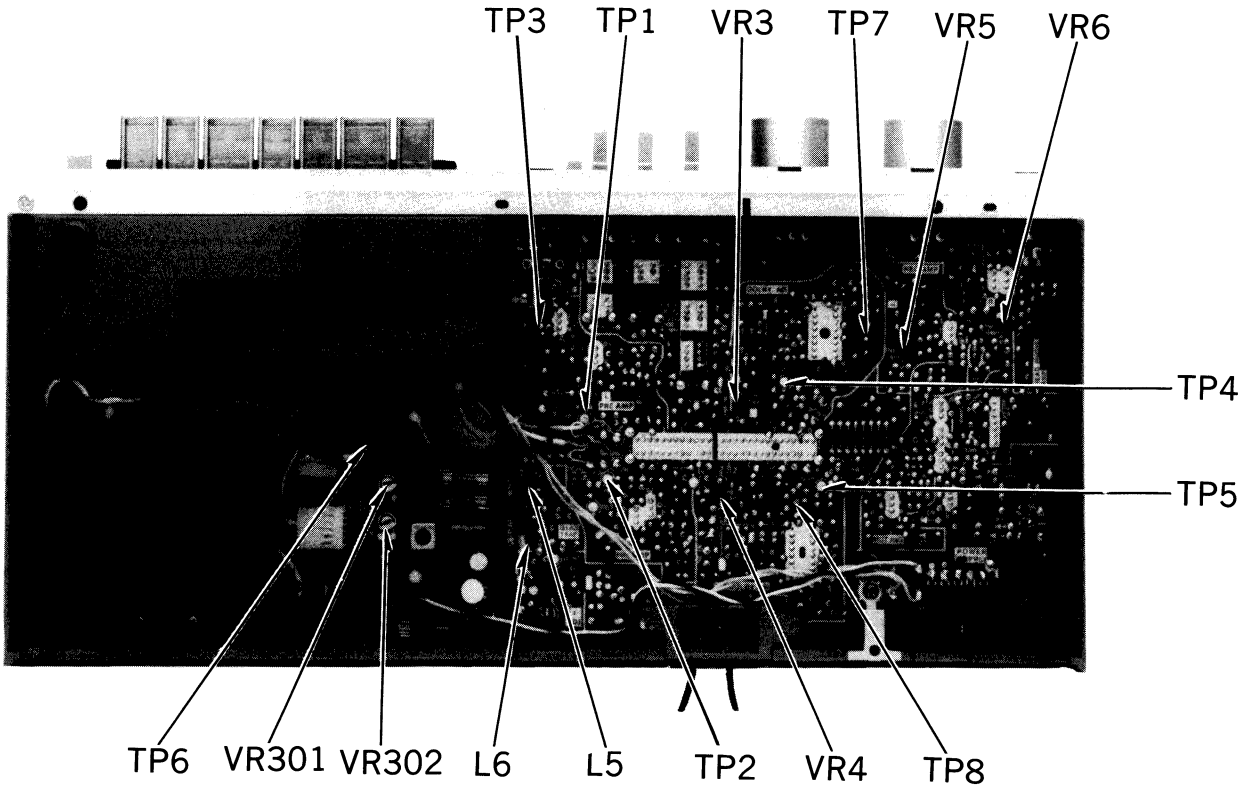

Fig. 8

Caution:

Tape speed can be adjusted through the small hole on the back-side of main case by the ⊖ driver as shown in the diagram below.

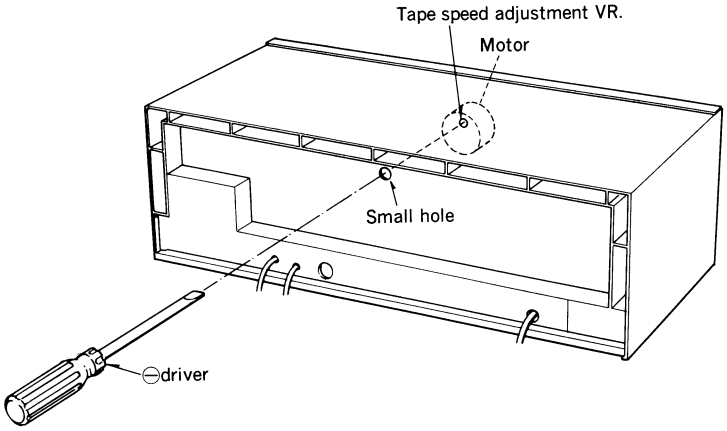

MEASUREMENT AND ADJUSTMENT METHODS

NOTES: Keep good condition, set lever switches and controls in the following positions, unless otherwise specified.

- Make sure heads are clean.
- Make sure capstan and pressure roller are clean.
- Judgeable room temperature: 20±5°C (68±9°F)
- Dolby NR switch: OUT
- Tape selector: Normal position
- Input selector: Line in
- Input level control: Maximum

ITEM	MEASUREMENT & ADJUSTMENT
Ⓐ Head azimuth adjustment Condition: * Playback mode Equipment: * VTVM * Oscilloscope * Test tape (azimuth) ··· QZZCFM * Test tape (tape path viewer) ··· QZZCRD	**Record/playback head azimuth adjustment** 1. Test equipment connection is shown in fig. 9. 2. Playback azimuth tape (QZZCFM 8kHz). 3. Adjust record/playback head angle adjustment screw (A) in fig. 10 so that output level at LINE OUT becomes maximum. 4. Measure both channels, and adjust levels for equal output. 5. After adjustment lock head adjustment screw (A) with lacquer. 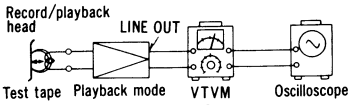 Fig. 9 **Erase head azimuth adjustment** 1. Test equipment connection is the same above but use the tape path viewer (QZZCRD) instead of test tape (QZZCFM). 2. Playback this tape. 3. Adjust screw (B) shown in fig. 11 so that the tape may not get curled or malformed by tape guide of the erase head. 4. After adjustment, lock head adjust screw (B) with lacquer. 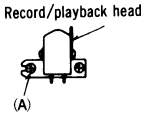 Fig. 10 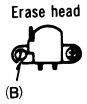 Fig. 11
Ⓑ Tape speed Condition: * Playback mode Equipment: * Digital electronic counter or frequency counter * Test tape ··· QZZCWAT	**Tape speed accuracy** 1. Test equipment connection is shown in fig. 12. 2. Playback test tape (QZZCWAT 3,000Hz), and supply playback signal to digital electronic counter. 3. Measure this frequency. 4. On the basis of 3,000Hz, determine value by following formula: $\text{Tape speed accuracy} = \frac{f - 3{,}000}{3{,}000} \times 100\ (\%)$ where, f = measured value 5. Take measurement at middle section of tape. **Standard value: ±1.5%** 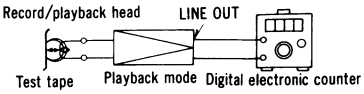 Fig. 12

ITEM	MEASUREMENT & ADJUSTMENT
	Adjustment method 1. Playback the test tape (middle). 2. Adjust so that frequency becomes 3,000 Hz. 3. Tape speed adjustment VR shown in "Caution" on page 4. **Tape speed fluctuation** Make measurements in same manner as above (beginning, middle and end of tape), and determine the difference between maximum and minimum values and calculate as follows: $\text{Tape speed fluctuation} = \frac{f_1 - f_2}{3{,}000} \times 100\ (\%)$ f_1 = maximum value, f_2 = minimum value **Standard value: Less than 1%**
Ⓒ Playback frequency response Condition: * Playback mode * Tape selector ··· Normal position Equipment: * VTVM * Oscilloscope * Test tape ··· QZZCFM	1. Test equipment connection is as same a as "Head azimuth adjustment" (See fig. 9). 2. Place UNIT into playback mode. 3. Playback frequency response test tape. 4. Measure output level at 8 kHz, 4 kHz, 1 kHz, 315 Hz, 250 Hz, 125 Hz and 63 Hz, and compare each output level with standard frequency 315 Hz, at LINE OUT. 5. Make measurement for both channels. 6. Make sure that the measured value is within the range specified in the playback frequency response chart. **Playback frequency response chart** 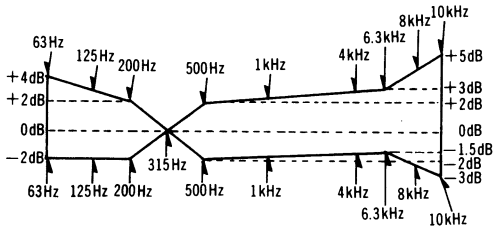 **Fig. 13**
Ⓓ Playback gain Condition: * Playback mode * Tape selector ··· Normal position Equipment: * VTVM * Oscilloscope * Test tape ··· QZZCFM	1. Test equipment connection is shown in fig. 9. 2. Playback standard recording level portion on test tape (QZZCFM 315 Hz), and using VTVM measure the output level at LINE OUT. 3. Make measurement for both channels. **Standard value: around 0.39 V** **Adjustment** 1. If measured value is not within standard, adjust VR3 (L-CH), VR4 (R-CH) (See fig. 8). 2. After adjustment, check "Playback frequency response" again.
Ⓔ Bias leakage Condition: * Record mode * Input level control ··· MAX * Tape selector ··· Metal position Equipment: * VTVM * Oscilloscope	1. Test equipment connection is shown in fig. 14. 2. Place UNIT into record mode. 3. Adjust trap coils L5 (L-CH), L6 (R-CH), so that measured value becomes minimum. 4. Make adjustment for both channels. 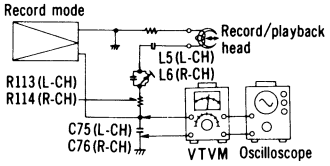 **Fig. 14**
Ⓕ Erase current Condition: * Record mode * Tape selector ··· Metal position Equipment: * VTVM * Oscilloscope	1. Test equipment connection is shown in fig. 15. 2. Place UNIT into record mode and measure voltage at test point 6. 3. Determine erase current with the following formula: $\text{Erase current (A)} = \frac{\text{Voltage across both ends of R304}}{1\ (\Omega)}$ 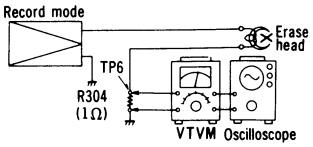 **Fig. 15** **Standard value: around 155 mA (Tape selector ··· Metal)** 4. If measured value is not within standard, adjust as follows.

ITEM	MEASUREMENT & ADJUSTMENT
	Adjustment 1. Open the point (**A**) and short the point (**B**) on the main circuit board in the wiring connection diagram (See page 8). 2. Make measurement for erase current. 3. Make sure that the measured value is within the erase current of 145 mA to 165 mA. 4. If it is beyond the value, carry out the following adjustments: • If the erase current is less than 145 mA, short the point (**A**). • If the erase current is more than 165 mA, open the points (**A**) and (**B**).
Ⓖ Bias current Condition: • Record mode • Tape selector ··· Normal position ··· CrO_2 position ··· Metal position Equipment: • VTVM • Oscilloscope	1. Test equipment connection is shown in fig. 16. 2. Place UNIT into record mode, and tape selector to normal position. 3. Read voltage on VTVM and calculate bias current by following formula: $\text{Bias current (A)} = \frac{\text{Value read on VTVM (V)}}{10\ (\Omega)}$ **Standard value: around 400μA (Normal position)** 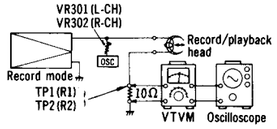 **Fig. 16** 4. If measured value is not within standard, adjust VR301 (L-CH) and VR302 (R-CH) (See fig. 8 on page 3). 5. Set the tape selector to each position. 6. Make sure that the measured value is within standard. **Standard value: around 550μA (CrO_2 position), around 830μA (Metal position)**
Ⓗ Overall gain Condition: • Record/playback mode • Input level control ··· MAX • Standard input level; MIC ····· −72±4 dB LINE IN ··· −24±3 dB Equipment: • VTVM • AF oscillator • ATT • Oscilloscope • Resistor (600 Ω) • Test tape (reference blank tape) ··· QZZCRA for Normal	1. Test equipment connection is shown in fig. 17. 2. Place UNIT into record mode, and tape selector to normal position. 3. Supply 1 kHz signal (−24 dB) from AF oscillator, through ATT to LINE IN. 4. Adjust ATT until monitor level at LINE OUT becomes 0.39 V. 5. Using test tape, make recording. 6. Playback recorded tape, and make sure the value at LINE OUT on VTVM becomes 0.39 V (−7 dB). 7. If measured value is not 0.39 V, adjust VR5 (L-CH), VR6 (R-CH) (See fig. 8 on page 3). 8. Repeat from step (2). 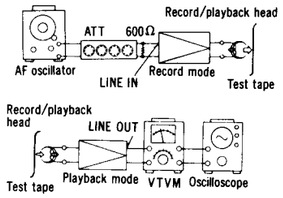 **Fig. 17**
Ⓘ Overall frequency response Condition: • Record/playback mode • Tape selector ··· Normal position ··· CrO_2 position ··· Metal position • Input level control ··· MAX Equipment: • VTVM • AF oscillator • ATT • Oscilloscope • Resistor (600 Ω) • Test tape (reference blank tape) ··· QZZCRA for Normal ··· QZZCRX for CrO_2 ··· QZZCRZ for Metal	**Note:** Before measuring and adjusting, make sure of the playback frequency response (For the method of measurement, please refer to the playback frequency response). 1. Test equipment connection is shown in fig. 17. 2. Place the test tape (QZZCRA) in the cassette holder. 3. Place UNIT into record mode, and tape selector to normal position. 4. Supply 1 kHz signal from AF oscillator through ATT to LINE IN. Overall frequency response chart (Normal) 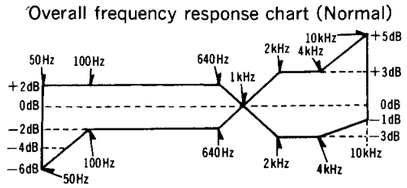 **Fig. 18**

ITEM	MEASUREMENT & ADJUSTMENT
	5. Adjust ATT so that input level is −20 dB below standard recording level (standard recording level = 0 VU). 6. At this time, LINE OUT level indicates 0.039 V. 7. Record each frequency 30 Hz, 100 Hz, 1 kHz, 4 kHz, 8 kHz and 10 kHz (12 kHz for CrO_2 and Metal). 8. Playback and express in dB the difference between playback output level of each frequency based on playback output level of 1 kHz. 9. Change test tape to CrO_2 (QZZCRX) and metal (QZZCRZ). 10. Set the tape selector to each position. 11. Measure as same as manner above. 12. Make sure that the measured value is within the range specified in the overall frequency response chart for CrO_2 and metal tape shown in fig. 18, 19 and 20. Overall frequency response chart (CrO_2) 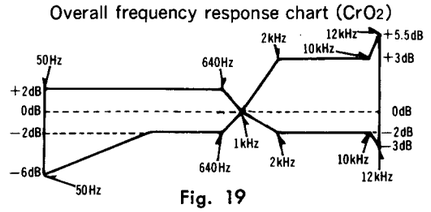 **Fig. 19** Overall frequency response chart (Metal) 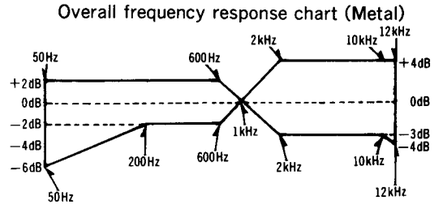 **Fig. 20** **Adjustment — Using bias current** 1. When the frequency response between the middle and high frequency range becomes higher than the standard value, as shown by the solid line in fig. 21 increas, refer to bias current adjustment. 2. When it becomes lower, as shown by dotted line, refer to bias current adjustment. **Note:** For the method of bias current measurement, refer to "Bias current adjustment" on page 6. 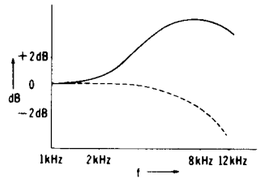 **Fig. 21**
Ⓙ Level meter Condition: • Record mode • Input level control ··· MAX Equipment: • VTVM • AF oscillator • ATT • Oscilloscope • Resistor (600 Ω)	1. Test equipment connection is shown in fig. 22. 2. Supply 1 kHz signal from the AF oscillator, through the ATT to the LINE IN. 3. Adjust ATT so that the monitor level at LINE OUT becomes 0.39 V. 4. Check to see that the level meter stays within the range of −1 dB to +1 dB. 5. If it is beyond the range, carry out the following adjustments: • Open soldered points (**C**) (L-CH) and (**E**) (R-CH) indicated as "DOWN" where level more than +1 dB. • Open soldered points (**D**) (L-CH) and (**F**) (R-CH) indicated as "UP" where level less than −1 dB. (See wiring connection diagram on page 8.) 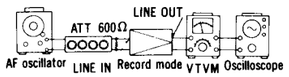 **Fig. 22**
Ⓚ Dolby NR circuit Condition: • Record mode • Dolby NR switch ··· IN/OUT • Input level control ··· MAX Equipment: • VTVM • AF oscillator • ATT • Oscilloscope • Resistor (600 Ω)	1. Test equipment connection is shown in fig. 23. 2. Place UNIT into record mode, set the Dolby NR switch to OUT position and supply to LINE IN to obtain −34.5 dB at TP7 (L-CH), TP8 (R-CH) (frequency 5 kHz). 3. Confirm that the value at IN position is 8 (±2.5) dB greater than the value at OUT position of Dolby NR switch. 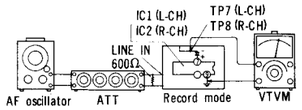 **Fig. 23**

SCHEMATIC DIAGRAM

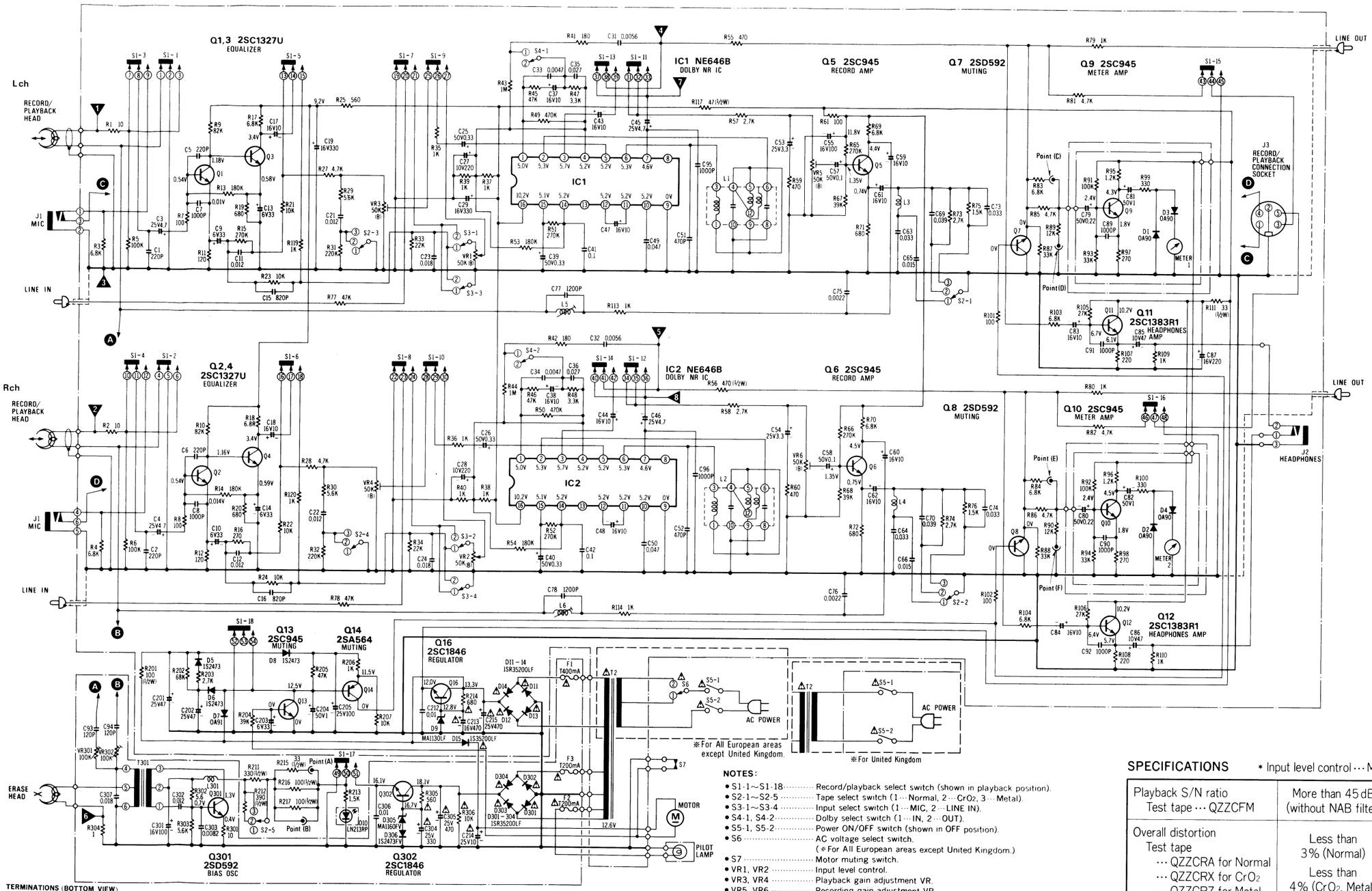

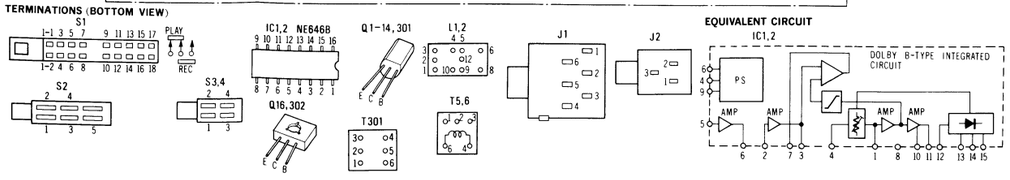

NOTES:

- S1-1~S1-18 ····· Record/playback select switch (shown in playback position).
- S2-1~S2-5 ····· Tape select switch (1···Normal, 2···CrO_2, 3···Metal).
- S3-1~S3-4 ····· Input select switch (1···MIC, 2···LINE IN).
- S4-1, S4-2 ····· Dolby select switch (1···IN, 2···OUT).
- S5-1, S5-2 ····· Power ON/OFF switch (shown in OFF position).
- S6 ····· AC voltage select switch. (※For All European areas except United Kingdom.)
- S7 ····· Motor muting switch.
- VR1, VR2 ····· Input level control.
- VR3, VR4 ····· Playback gain adjustment VR.
- VR5, VR6 ····· Recording gain adjustment VR.
- VR301, VR302 ····· Bias current adjustment VR.
- L5, L6 ····· Bias leakage adjustment coil.
- Resistance are in ohms (Ω), 1/4 watt unless specified otherwise. K = 1,000 Ω.
- Capacity are in microfarads (μF) unless specified otherwise. P = Pico-farads.
- The mark (▼) shows test point. e.g. ▽ = Test point 1.
- All voltage values shown in circuitry are under no signal condition with volume control at minimum position. For measurement, use VTVM.
- △ indicates that only parts specified by the manufacturer used for safety.

SPECIFICATIONS

* Input level control ··· MAX

Playback S/N ratio Test tape ··· QZZCFM	More than 45 dB (without NAB filter)
Overall distortion Test tape ··· QZZCRA for Normal ··· QZZCRX for CrO_2 ··· QZZCRZ for Metal	 Less than 3% (Normal) Less than 4% (CrO_2, Metal)
Overall S/N ratio Test tape ··· QZZCRA	More than 43 dB (without NAB filter)

NOTES: RESISTORS

- ERD ··· Carbon
- ERG ··· Metal-oxide
- ERO ··· Metal-film
- ERX ··· Metal-film
- ERQ ··· Fuse type metallic
- ERC ··· Solid
- ERF ··· Cement

CAPACITORS

- ECG□ ····· Ceramic
- ECK□ ····· Ceramic
- ECC□ ····· Ceramic
- ECF□ ····· Ceramic
- ECQM ····· Polyester film
- ECQE ····· Polyester film
- ECQF ····· Polypropylene
- ECE□
- ECE□
- ECQS
- ECS□

NOTE: △ indicates that only parts specified by the manufacturer be used for safety.

Ref. No.	Part No.
RESISTORS	
R1, 2	ERD25FJ100
R3, 4	ERD25FJ562
R5, 6	ERD25TJ104
R7, 8	ERD25FJ101
R9, 10	ERD25TJ823
R11, 12	ERD25FJ121
R13, 14	ERD25TJ184
R15, 16	ERD25TJ274
R17, 18	ERD25FJ682
R19, 20	ERD25FJ681
R21, 22, 23, 24	ERD25FJ103
R25	ERD25FJ561
R27, 28	ERD25FJ472
R29, 30	ERD25FJ562
R31, 32	ERD25TJ224
R33, 34	ERD25TJ223
R35, 36, 37, 38, 39, 40	ERD25FJ102
R41, 42	ERD25FJ181
R43, 44	ERD25TJ105
R45, 46	ERD25TJ473
R47, 48	ERD25FJ332
R49, 50	ERD25TJ474
R51, 52	ERD25TJ274
R53, 54	ERD25TJ184
R55, 56	ERD25FJ471
R57, 58	ERD25FJ272
R59, 60	ERD25FJ471
R61	ERD50FJ101
R65, 66	ERD25TJ274
R67, 68	ERD25TJ393
R69, 70	ERD25FJ682
R71, 72	ERD25FJ681
R73, 74	ERD25FJ272
R75, 76	ERD25FJ152
R77, 78	ERD25TJ473
R79, 80	ERD25FJ102
R81, 82	ERD25FJ472
R83, 84	ERD25FJ682
R85, 86	ERD25FJ472
R87, 88	ERD25TJ333
R89, 90	ERD25TJ123

Ref. No.	Part No.
R91, 92	ERD25TJ104
R93, 94	ERD25TJ333
R95, 96	ERD25FJ122
R97, 98	ERD25FJ271
R99, 100	ERD25FJ331
R101, 102	ERD25FJ101
R103, 104	ERD25FJ682
R105, 106	ERD25TJ273
R107, 108	ERD25FJ221
R109, 110	ERD25FJ102
R111	ERG12ANJ330
R113, 114	ERD25FJ102
R117	ERD50FJ470
R201	ERD50FJ101
R202	ERD25TJ683
R203	ERD25FJ272
R204	ERD25TJ393
R205	ERD25TJ473
R206	ERD25FJ102
R207	ERD25FJ103
R211	ERD50FJ331
R212	ERD50FJ391
R213	ERD25FJ152
R214	ERD25FJ681
R215	ERG12ANJ330
R216, 217	ERD50FJ101
R301	ERD25FJ100
R302, 303	ERD25FJ562
R304	ERD25FJ1R0
R305	ERD25FJ561
R306	ERD25FJ103
VARIABLE RESISTORS	
VR1, 2	QVH3AA067A54
VR3, 4, 5, 6	EVNK4AA00B54
VR301, 302	EVNK4AA00B15
CAPACITORS	
C1, 2	ECCD1H221K
C3, 4	ECEA25M4R7
C5, 6	ECCD1H221K
C7, 8	ECFWD102KVY
C9, 10	ECEA1CS330
C11, 12	ECFDD123KVY

Ref. No.	Part No.	Part Name & Description
TRANSFORMERS		
T2 ▽ △	QLPD46EKC	Power Transformer
※For All European areas except United Kingdom.		
▽ △	QLPA55EKC	〃
※For United Kingdom.		
T301	QLB0198K	Bias Oscillation Transformer
COILS		
L1, 2	QLM9Z7	MPX Filter
L3, 4	QLQX0332K	Peaking Coil
L5, 6	QLQC2721K	Bias Trap Coil
L301	QLQX2421Y	RF Trap Coil
SWITCHES		
S1	QSSI205T	Slide Switch (Record/Playback Selector)
S2	QES1490 "Silver Type"	Lever Switch (Tape Selector)
	QES1485 "Black Type"	〃
S3	QES1491 "Silver Type"	Lever Switch (Input Selector)
	QES1486 "Black Type"	〃
S4	QES1492 "Silver Type"	Lever Switch (Dolby IN/OUT Selector)
	QES1487 "Black Type"	〃
S5 △	QSW2214A	Push Switch (Power ON/OFF)
S6 ▽ △	QSR1409H	Rotary Switch (AC Power Voltage Selector)
※For All European areas except United Kingdom.		
S7	QSB0247	Leaf Switch (Motor ON/OFF)
FUSES		
F1 △	XBAQ0007	Fuse (T 400mA)
F2, 3 △	XBAQ0013	Fuse (T 200mA)
JACKS		
J1	QJA0257H	Microphone Jack
J2	QJA0249C	Headphone Jack
J3	QJS1954H	Record/Playback Connection Socket

Ref. No.
C13, 14
C15, 16
C17, 18
C19
C21, 22
C23, 24
C25, 26
C27, 28
C29
C31, 32
C33, 34
C35, 36
C37, 38
C39, 40
C41, 42
C43, 44
C45, 46
C47, 48
C49, 50
C51, 52
C53, 54
C55
C57, 58
C59, 60
C63, 64
C65, 66
C69, 70
C73, 74
C75, 76
C77, 78
C79, 80
C81, 82
C83, 84
C85, 86
C87
C89, 90
C93, 94
C95, 96
C201, 2
C203
C204
C205
C212
C213
C214
C215
C301
C302
C303
C304
C305
C306
C307
TR
Q1, 2, 3,
Q5, 6
Q7, 8
Q9, 10
Q11, 12
Q13
Q14
Q16
Q301
Q302
D1, 2, 3,
D5, 6
D7
D8
D9
D10
D11, 12,
D301, 30
D305
D306
INTEG
IC1, 2

HEMATIC DIAGRAM

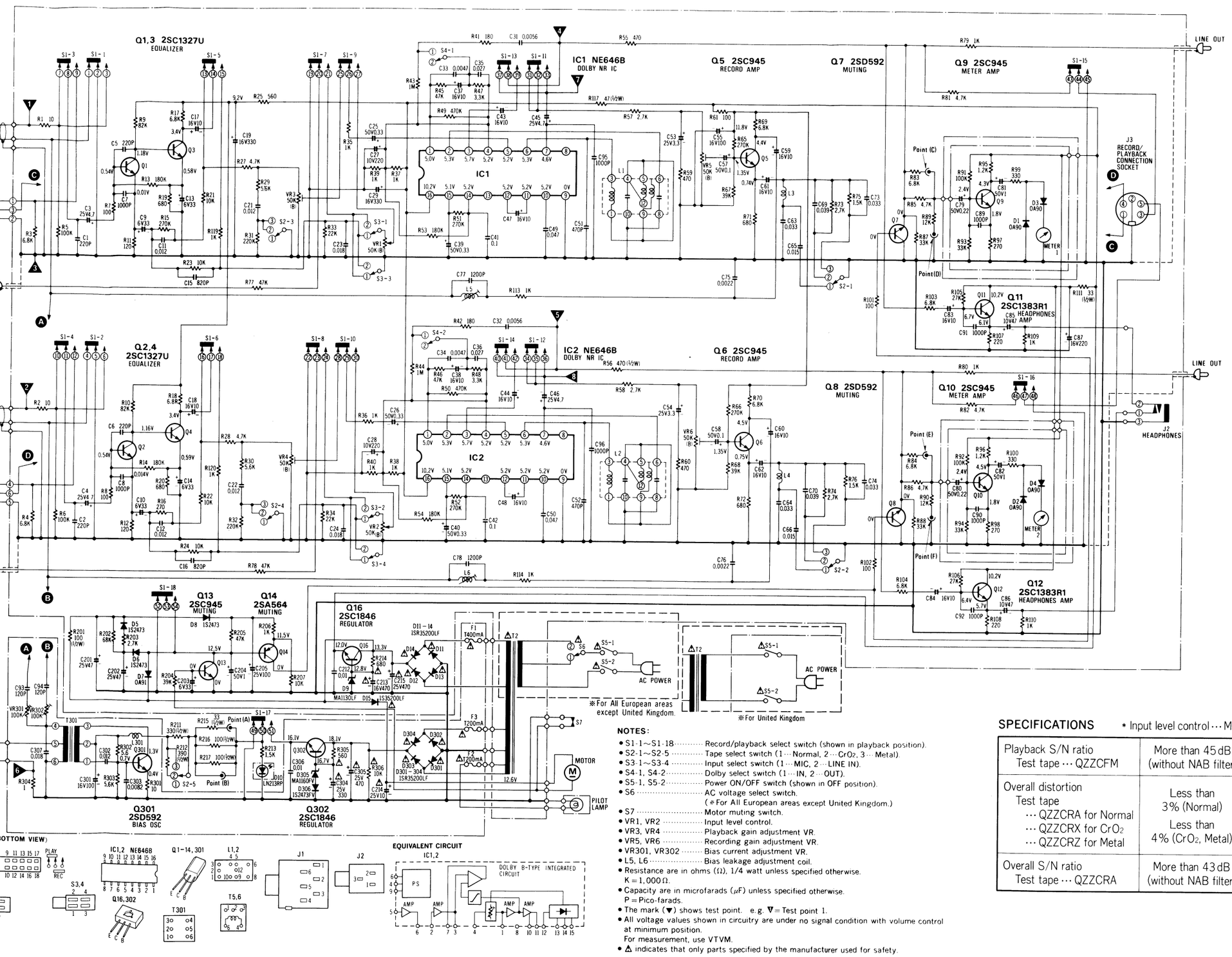

NOTES:

- S1-1~S1-18 ····· Record/playback select switch (shown in playback position).
- S2-1~S2-5 ····· Tape select switch (1···Normal, 2···CrO_2, 3···Metal).
- S3-1~S3-4 ····· Input select switch (1···MIC, 2···LINE IN).
- S4-1, S4-2 ····· Dolby select switch (1···IN, 2···OUT).
- S5-1, S5-2 ····· Power ON/OFF switch (shown in OFF position).
- S6 ····· AC voltage select switch.
  (※For All European areas except United Kingdom.)
- S7 ····· Motor muting switch.
- VR1, VR2 ····· Input level control.
- VR3, VR4 ····· Playback gain adjustment VR.
- VR5, VR6 ····· Recording gain adjustment VR.
- VR301, VR302 ····· Bias current adjustment VR.
- L5, L6 ····· Bias leakage adjustment coil.
- Resistance are in ohms (Ω), 1/4 watt unless specified otherwise.
  K = 1,000 Ω.
- Capacity are in microfarads (μF) unless specified otherwise.
  P = Pico-farads.
- The mark (▼) shows test point. e.g. ▼ = Test point 1.
- All voltage values shown in circuitry are under no signal condition with volume control at minimum position.
  For measurement, use VTVM.
- ⚠ indicates that only parts specified by the manufacturer used for safety.

SPECIFICATIONS

* Input level control ··· MAX

Playback S/N ratio Test tape ··· QZZCFM	More than 45 dB (without NAB filter)
Overall distortion Test tape ··· QZZCRA for Normal ··· QZZCRX for CrO_2 ··· QZZCRZ for Metal	Less than 3% (Normal) Less than 4% (CrO_2, Metal)
Overall S/N ratio Test tape ··· QZZCRA	More than 43 dB (without NAB filter)

NOTES: RESISTORS
ERD ··· Carbon
ERG ··· Metal-oxide
ERO ··· Metal-film
ERX ··· Metal-film
ERQ ··· Fuse type metallic
ERC ··· Solid
ERF ··· Cement

CAPACITORS
ECG□ ····· Ceramic
ECK□ ····· Ceramic
ECC□ ····· Ceramic
ECF□ ····· Ceramic
ECQM ····· Polyester film
ECQE ····· Polyester film
ECQF ····· Polypropylene
ECE□ ····· Electrolytic
ECE□N ··· Non polar electrolytic
ECQS ····· Polystyrene
ECS□ ····· Tantalum

NOTE: ⚠ indicates that only parts specified by the manufacturer be used for safety.

Ref. No.	Part No.
RESISTORS	
R1, 2	ERD25FJ100
R3, 4	ERD25FJ562
R5, 6	ERD25TJ104
R7, 8	ERD25FJ101
R9, 10	ERD25TJ823
R11, 12	ERD25FJ121
R13, 14	ERD25TJ184
R15, 16	ERD25TJ274
R17, 18	ERD25FJ682
R19, 20	ERD25FJ681
R21, 22, 23, 24	ERD25FJ103
R25	ERD25FJ561
R27, 28	ERD25FJ472
R29, 30	ERD25FJ562
R31, 32	ERD25TJ224
R33, 34	ERD25TJ223
R35, 36, 37, 38, 39, 40	ERD25FJ102
R41, 42	ERD25FJ181
R43, 44	ERD25TJ105
R45, 46	ERD25TJ473
R47, 48	ERD25FJ332
R49, 50	ERD25TJ474
R51, 52	ERD25TJ274
R53, 54	ERD25TJ184
R55, 56	ERD25FJ471
R57, 58	ERD25FJ272
R59, 60	ERD25FJ471
R61	ERD50FJ101
R65, 66	ERD25TJ274
R67, 68	ERD25TJ393
R69, 70	ERD25FJ682
R71, 72	ERD25FJ681
R73, 74	ERD25FJ272
R75, 76	ERD25FJ152
R77, 78	ERD25TJ473
R79, 80	ERD25FJ102
R81, 82	ERD25FJ472
R83, 84	ERD25FJ682
R85, 86	ERD25FJ472
R87, 88	ERD25TJ333
R89, 90	ERD25TJ123
R91, 92	ERD25TJ104
R93, 94	ERD25TJ333
R95, 96	ERD25FJ122
R97, 98	ERD25FJ271
R99, 100	ERD25FJ331
R101, 102	ERD25FJ101
R103, 104	ERD25FJ682
R105, 106	ERD25TJ273
R107, 108	ERD25FJ221
R109, 110	ERD25FJ102
R111	ERG12ANJ330
R113, 114	ERD25FJ102
R117	ERD50FJ470
R201	ERD50FJ101
R202	ERD25TJ683
R203	ERD25FJ272
R204	ERD25TJ393
R205	ERD25TJ473
R206	ERD25FJ102
R207	ERD25FJ103
R211	ERD50FJ331
R212	ERD50FJ391
R213	ERD25FJ152
R214	ERD25FJ681
R215	ERG12ANJ330
R216, 217	ERD50FJ101
R301	ERD25FJ100
R302, 303	ERD25FJ562
R304	ERD25FJ1R0
R305	ERD25FJ561
R306	ERD25FJ103
VARIABLE RESISTORS	
VR1, 2	QVH3AA067A54
VR3, 4, 5, 6	EVNK4AA00B54
VR301, 302	EVNK4AA00B15
CAPACITORS	
C1, 2	ECCD1H221K
C3, 4	ECEA25M4R7
C5, 6	ECCD1H221K
C7, 8	ECFWD102KVY
C9, 10	ECEA1CS330
C11, 12	ECFDD123KVY
C13, 14	ECEA1CS830
C15, 16	ECKD1H821KB
C17, 18	ECEA1HS100
C19	ECEA1CS331
C21, 22	ECFDD123KVY
C23, 24	ECFDD183KVY
C25, 26	ECEA50MR33
C27, 28	ECEA1AS221
C29	ECEA1CS331
C31, 32	ECQM1H562JZ
C33, 34	ECQM1H472JZ
C35, 36	ECQM1H273JZ
C37, 38	ECEA1HS100
C39, 40	ECEA50MR33
C41, 42	ECFWD104MXY
C43, 44	ECEA1HS100
C45, 46	ECEA1JS4R7
C47, 48	ECEA1HS100
C49, 50	ECFDD473KXY
C51, 52	ECKD1H471KB
C53, 54	ECEA2AS3R3
C55	ECEA1ES101
C57, 58	ECEA1HSR1
C59, 60, 61, 62	ECEA1HS100
C63, 64	ECFDD333KXY
C65, 66	ECFDD153KVY
C69, 70	ECFDD393KXY
C73, 74	ECFDD333KXY
C75, 76	ECFDD222KVY
C77, 78	ECQP1152JZ
C79, 80	ECEA1HSR22
C81, 82	ECEA2AS010
C83, 84	ECEA1HS100
C85, 86	ECEA1AS470
C87	ECEA1CS221
C89, 90, 91, 92	ECKD1H102ZF
C93, 94	ECCD1H121K
C95, 96	ECKD1H102ZF
C201, 202	ECEA1ES470
C203	ECEA1CS330
C204	ECEA2AS010
C205	ECEA1ES101
C212	ECKD1H103ZF
C213	ECEA1CS471
C214 ⚠	ECEA1HS100
C215 ⚠	ECEA1ES471
C301	ECEA1ES101
C302	ECFDD123KVY
C303	ECFDD822KVY
C304	ECEA1ES331
C305	ECEA1ES471
C306	ECFDD103KVY
C307	ECQP1183JZ
TRANSISTORS	
Q1, 2, 3, 4	2SC1327
Q5, 6	2SC945
Q7, 8	2SD592NCS
Q9, 10	2SC945
Q11, 12	2SC1383
Q13	2SC945
Q14	2SA564
Q16	2SC1846
Q301	2SD592NCS
Q302	2SC1568
DIODES	
D1, 2, 3, 4	2OA90
D5, 6	MA161
D7	OA91
D8	MA161
D9	SVDEQA0113RA
D10	LN213RP
D11, 12, 13, 14, 15	SM112
D301, 302, 303, 304	SM112
D305	SVDRD16EB
D306	MA161
INTEGRATED CIRCUITS	
IC1, 2	NE646B

Ref. No.	Part No.	Part Name & Description
TRANSFORMERS		
T2 ⚠	QLPD46EKC	Power Transformer
※For All European areas except United Kingdom.		
⚠	QLPA55EKC	"
※For United Kingdom.		
T301	QLB0198K	Bias Oscillation Transformer
COILS		
L1, 2	QLM9Z7	MPX Filter
L3, 4	QLQX0332K	Peaking Coil
L5, 6	QLQC2721K	Bias Trap Coil
L301	QLQX2421Y	RF Trap Coil
SWITCHES		
S1	QSSI205T	Slide Switch (Record/Playback Selector)
S2	QES1490 "Silver Type"	Lever Switch (Tape Selector)
	QES1485 "Black Type"	"
S3	QES1491 "Silver Type"	Lever Switch (Input Selector)
	QES1486 "Black Type"	"
S4	QES1492 "Silver Type"	Lever Switch (Dolby IN/OUT Selector)
	QES1487 "Black Type"	"
S5 ⚠	QSW2214A	Push Switch (Power ON/OFF)
S6 ⚠	QSR1409H	Rotary Switch (AC Power Voltage Selector)
※For All European areas except United Kingdom.		
S7	QSB0247	Leaf Switch (Motor ON/OFF)
FUSES		
F1 ⚠	XBAQ0007	Fuse (T 400mA)
F2, 3 ⚠	XBAQ0013	Fuse (T 200mA)
JACKS		
J1	QJA0257H	Microphone Jack
J2	QJA0249C	Headphone Jack
J3	QJS1954H	Record/Playback Connection Socket

WIRING CONNECTION DIAGRAM

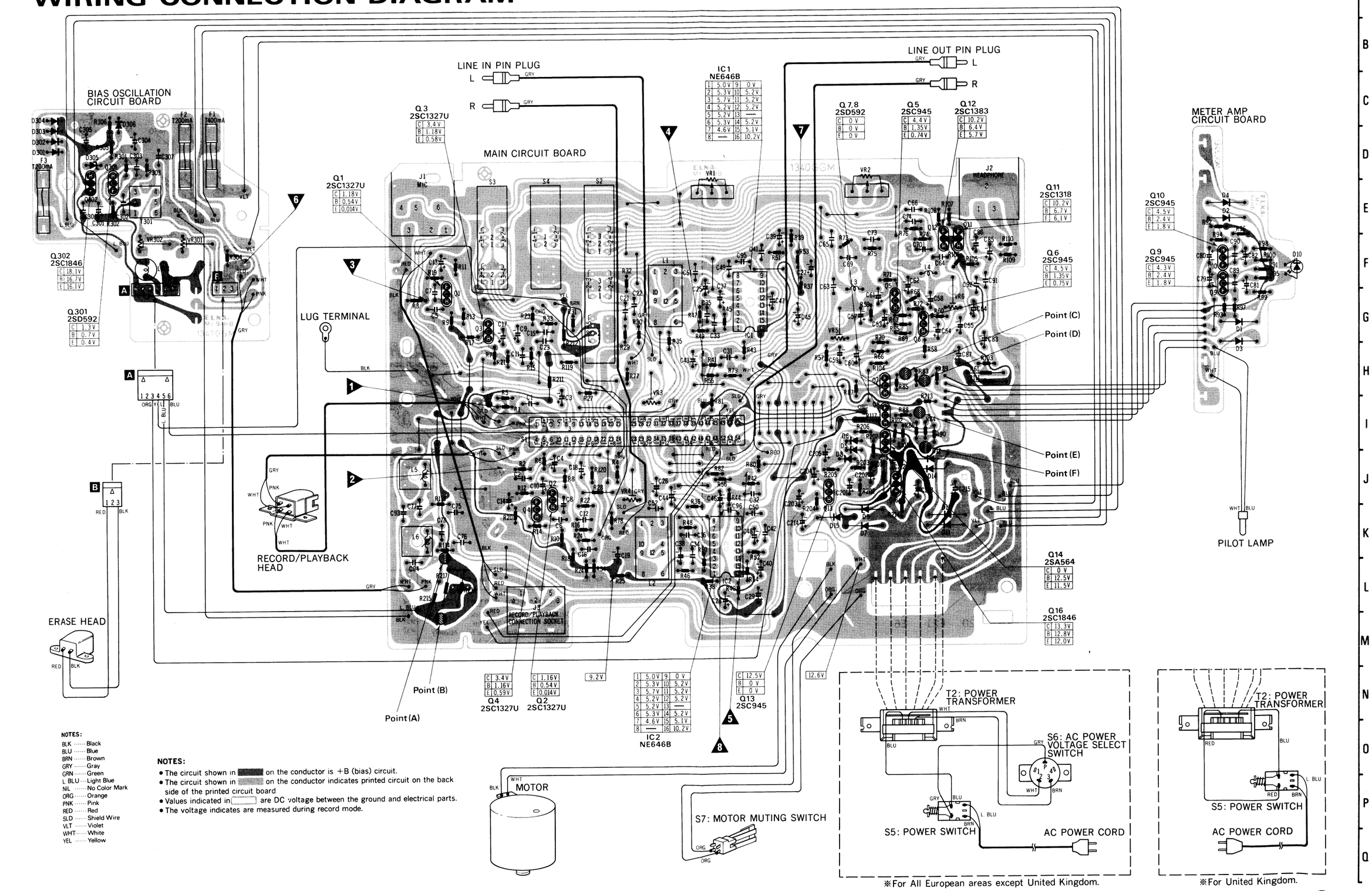

※For All European areas except United Kingdom.

※For United Kingdom.

NOTES:

- BLK ····· Black
- BLU ····· Blue
- BRN ····· Brown
- GRY ····· Gray
- GRN ····· Green
- L BLU ··· Light Blue
- NIL ····· No Color Mark
- ORG ····· Orange
- PNK ····· Pink
- RED ····· Red
- SLD ····· Shield Wire
- VLT ····· Violet
- WHT ····· White
- YEL ····· Yellow

NOTES:

- The circuit shown in ▬ on the conductor is +B (bias) circuit.
- The circuit shown in ▬ on the conductor indicates printed circuit on the back side of the printed circuit board
- Values indicated in ▭ are DC voltage between the ground and electrical parts.
- The voltage indicates are measured during record mode.

ELECTRICAL PARTS LOCATION

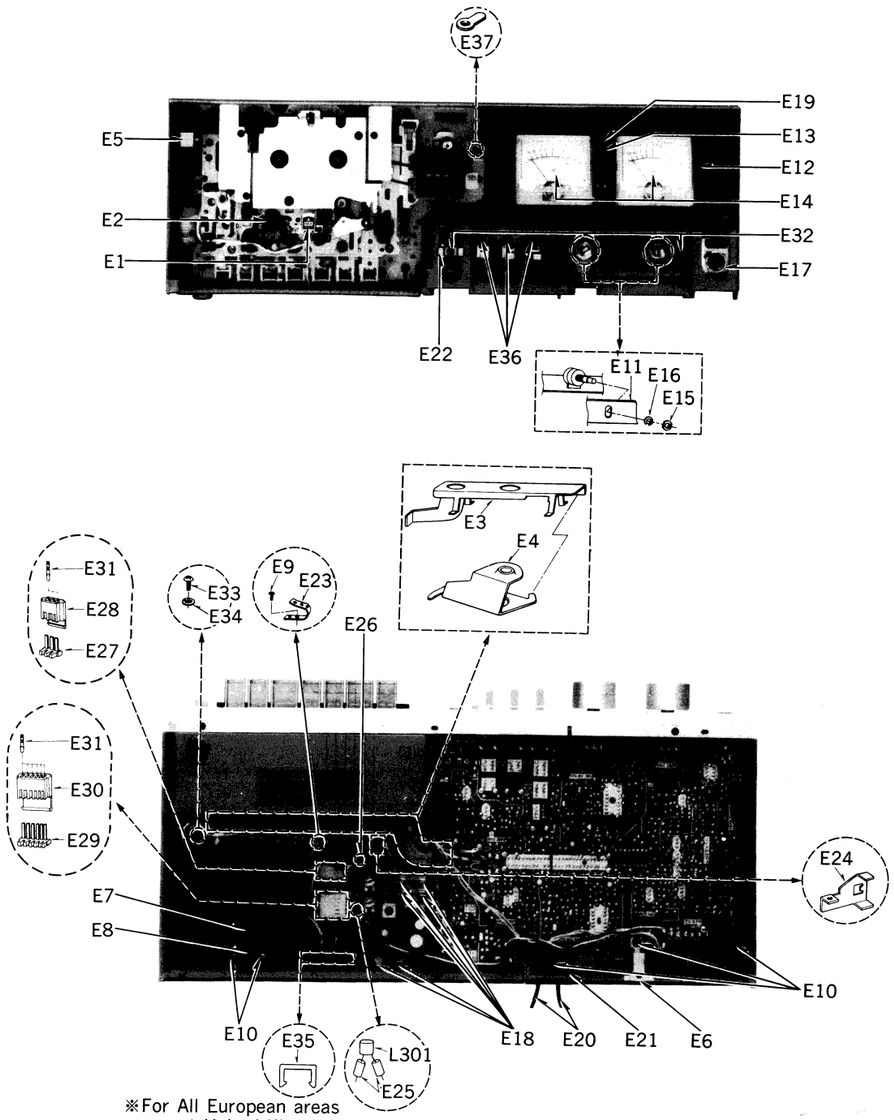

※For All European areas except United Kingdom.

NOTE: △ indicates that only parts specified by the manufacturer be used for safety.

Ref. No.	Part No.	Part Name & Description
	ELECTRICAL PARTS	
E1	QWY4122Z	Record/Playback Head
E2	QWY2138Z	Erase Head
E3	QML3568	Recording Lever-A
E4	QML3569	Recording Lever-B
E5	QXR0667	Power Button Assembly
	"Silver Type"	
	QXR0667K	"
	"Black Type"	
E6	QMA3840	Earth Plate
E7 ⓓ △	QFC1204M	AC Power Cord
※For All European areas except United Kingdom.		
ⓑ △	QFC1205M	"
※For United Kingdom.		
E8	QTD1164	Cord Bushing
E9	XTN3+10B	Tapping Screw ⊕3×10

Ref. No.	Part No.	Part Name & Description
E10	XTN3+16B	Tapping Screw ⊕3×16
E11	QMA3893	Volume Angle
E12	QKJ0381	Level Meter Holder
E13	QBG1366	Rubber Bush
E14	QSL1109RNM	Level Meter
E15	QNQ1004	Nut 8φ
E16	QWQ2002	Washer
E17	QNQ1070	Nut 12φ
E18 △	QTF1054	Fuse Holder
E19	XAMQ21P100N	Pilot Lamp
E20	QFC2135	Pin Cord
E21	QKJ0382H	Cord Clamper
	"Silver Type"	
	QKJ0382	"
	"Black Type"	

Ref. No.	Part No.	Part Name & Description
E22	QMA3841	Microphone Holder
E23	RME144ZA	Cord Clamper
E24	QMA3960	Circuit Board Angle
E25	QZE0003	Porcelain Tube
E26	QJT1067	Check Pin
E27	QJP1921TNL	3 Pin Post
E28	QJS1921TN	3 Pin Socket
E29	QJP1922TNL	6 Pin Post
E30	QJS1922TN	6 Pin Socket
E31	QJT1054	Contact
E32	XTN3+8B	Tapping Screw ⊕3×8
E33	XSN3+8S	Screw ⊕3×8
E34	XWA3B	Washer
E35 ⓓ	QKJ0395	Spacer
※For All European areas except United Kingdom.		
E36	XSN3+6	Screw ⊕3×6
E37	QJT0015	Lug Terminal

EXPLODED VIEWS

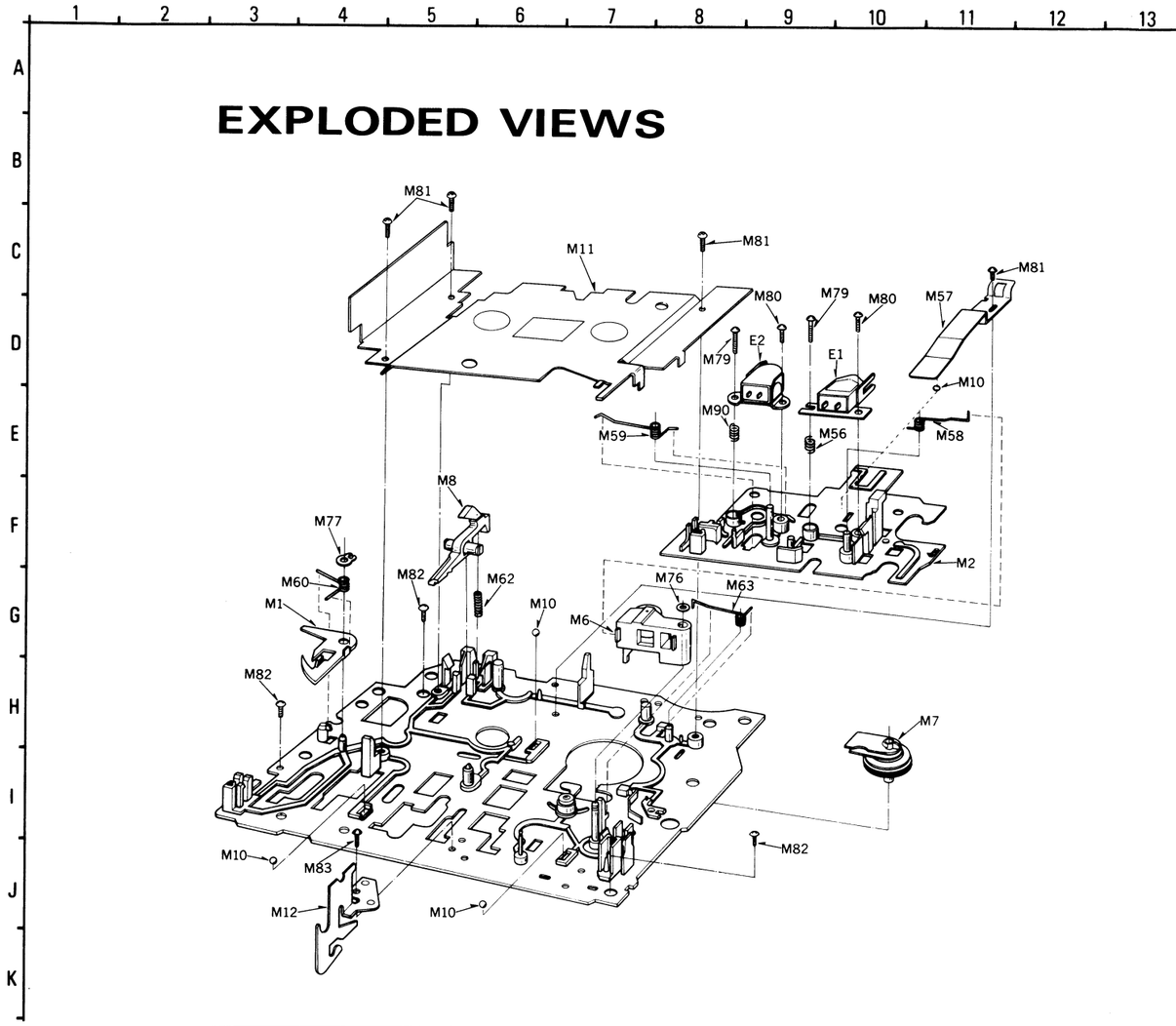

Ref. No.	Part No.	Part Name & Description
	MECHANICAL PARTS	
M1	QML2898	Pause Lock Plate
M2	QMK1829	Head Base Plate
M6	QXL1057	Pressure Roller Lever Assembly
M7	QXI0098	Takeup Idler Assembly
M8	QML3051	Erase Safety Lever
M10	QDK1012	Steel Ball 2.5φ
M11	QGK2997	Chassis Cover
M12	QMA3169	Shaft Reinforcement Angle
M13	QXF0163	Flywheel Assembly
M14	QXH0239	Flywheel Retainer Assembly
M15	MMI6A2LKPA	Motor
M16	QXP0513	Motor Pulley Assembly
M17	QDB0219	Flywheel Belt
M18	QXL1136	Fast Forward Arm Assembly
M18-1	QBN1517	Fast Forward Spring
M18-2	QBN1559	Fast Forward Arm Spring
M18-3	QMC0080	Collar
M19	QML3040	Cam Lever
M20	QXD0067	Takeup Reel Table Assembly
M21	QXD0084	Supply Reel Table Assembly
M22	QXL1384	Auto-Stop Lever Assembly
M23	QDG1096	Cam Gear
M24	QXG1026	Auto-Stop Gear Assembly
M25	QXL1037	Gear Lever Assembly
M26	QML3042	Auto-Stop Obstruction Lever

Ref. No.	Part No.	Part Name & Description
M27	QML3217	Pause Lever
M28	QML3124	Lock Release Arm
M30	QMR1735	Lock Rod Assembly
M31	QXR0342	Pause Rod Assembly
M32	QXR0465	Record Rod Assembly
M33	QXR0344	Playback Rod Assembly
M34	QMR1624	Rewind Rod-A
M35	QMR1623	Fast Forward Rod-A
M36	QMR1622	Stop Rod-A
M37	QMR1621	Eject Rod-A
M38	QML3038	Switch Arm
M39	QML3287	Brake Lever
M40	QDB0240	Counter Belt
M41	QXC0049	Tape Counter
	"Silver Type"	
	QXC0041	"
	"Black Type"	
M42	QMA3676	Counter Angle
M47	QXR0403	Eject Rod-B
M47-1	QBT1619	Idler Spring
M48	QMA3414	Motor Angle
M51	QXG1031	Damper Gear Assembly
M56	QBC1278	Head Spring
M57	QBP1841	Head Base Plate Pressure Spring
M58	QBN1488	Pressure Roller Spring
M59	QBN1733	Playback Spring
M60	QBN1480	Pause Lock Spring

Ref. No.	Part No.	Part Name & Description
M62	QBC1350	Safety Lever Spring
M63	QBN1513	Idler Spring
M65	QBN1574	Brake Spring
M66	QBC1344	Back Tension Spring
M67	QBN1555	Pause Spring
M68	QBP1664	Operation Rod Spring
M70	QBP1662	Lock Rod Spring
M71	QBT1682	Lock Holding Spring
M75	QBW2008	Snap Ring 2φ
M76	QBW2046	Snap Ring 3φ
M77	XUB4FT	Stop Ring C4φ
M79	QHQ1226	Head Adjustment Screw
M80	XSN2+10	Screw ⊕2×10
M81	XTN26+6B	Tapping Screw ⊕2.6×6
M82	XTN3+10B	Tapping Screw ⊕3×10
M83	XTN26+8B	Tapping Screw ⊕2.6×8
M84	XSN26+3	Screw ⊕2.6×3
M85	XTN3+25B	Tapping Screw ⊕3×25
M86	XTN26+6B	Tapping Screw ⊕2.6×6
M87	QML3504	Cue Lever
M88	QML3207	Muting Lever
M89	QBW2012	Snap Ring
M90	QBC1103	Head Spring
M91	QDG1116	Capstan Gear
M92	QBC1301	Capstan Spring
M93	QBW2049	Snap Ring

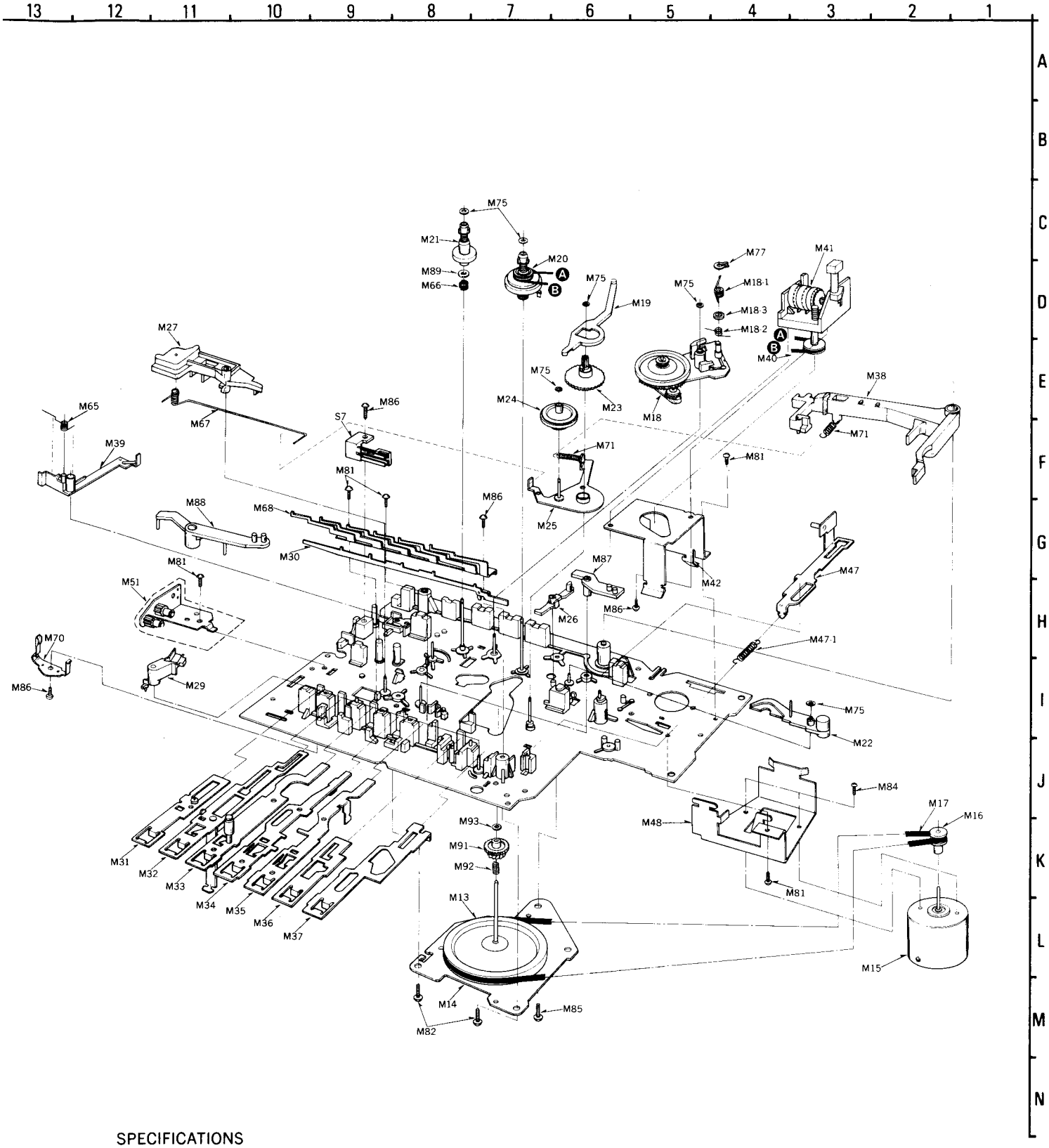

SPECIFICATIONS

Pressure of pressure roller	350±50 g
Takeup tension * Use cassette torque meter ··· QZZSRKCT	50±15 g-cm
Wow and flutter (JIS) * Use test tape ··· QZZCWAT	Less than 0.12% (WRMS)

CABINET PARTS

Ref. No.		Part No.	Part Name & Description
		CABINET PARTS	
G1	D	QKM1417H	Main Case
		"Silver Type"	
		QKM1385K	"
		"Black Type"	
※For All European areas except United Kingdom.			
	B	QKM1408H	"
※For United Kingdom.			
G2		QKA1081	Case Foot
G3		QGK2998	Switch Shelter
G4		QYT0572	Volume Knob Assembly
		"Silver Type"	
		QYT0583	"
		"Black Type"	
G5		QYF0434	Cassette Lid Assembly
		"Silver Type"	
		QYF0443	"
		"Black Type"	
G6		XTB3+8BFN	Tapping Screw ∓3×8
		"Silver Type"	
		XTB3+10BFZ	Tapping Screw ∓3×10
		"Black Type"	
G7		QYP0951	Front Panel Assembly
		"Silver Type"	
		QYP0951K	"
		"Black Type"	
G8		QGC1176	Bottom Cover
G9		QKA1083	Rubber Foot
G10		QHQ1299	Screw +3×8
G11		QKJ0385	Spacer
G12		XTN26+6	Tapping Screw ∓2.6×6
G13	D	QGS2810	Main Name Plate
※For All European areas except United Kingdom.			
	B	QGS2812	"
※For United Kingdom.			
G14		QGO1580	Pause Button
		"Silver Type"	
		QGO1593	"
		"Black Type"	
G15		QGO1579	Record Button
		"Silver Type"	
		QGO1592	"
		"Black Type"	
G16		QGO1578	Playback Button
		"Silver Type"	
		QGO1591	"
		"Black Type"	

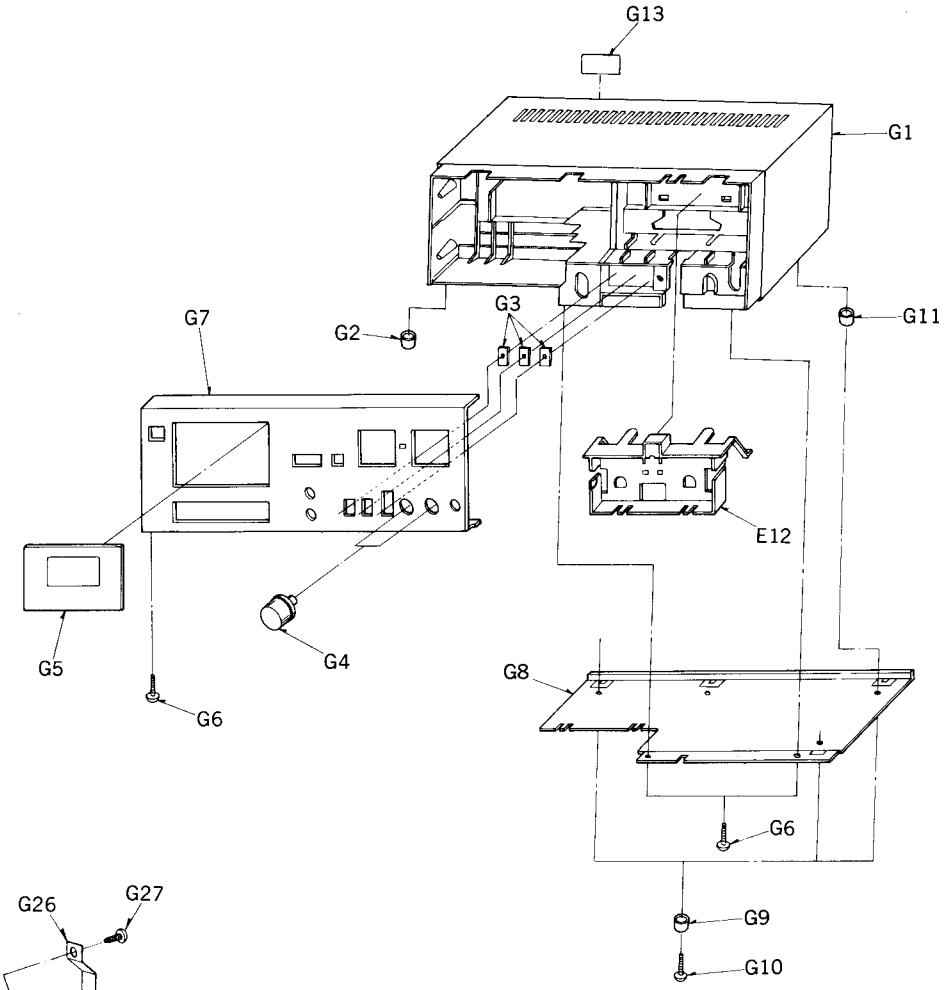

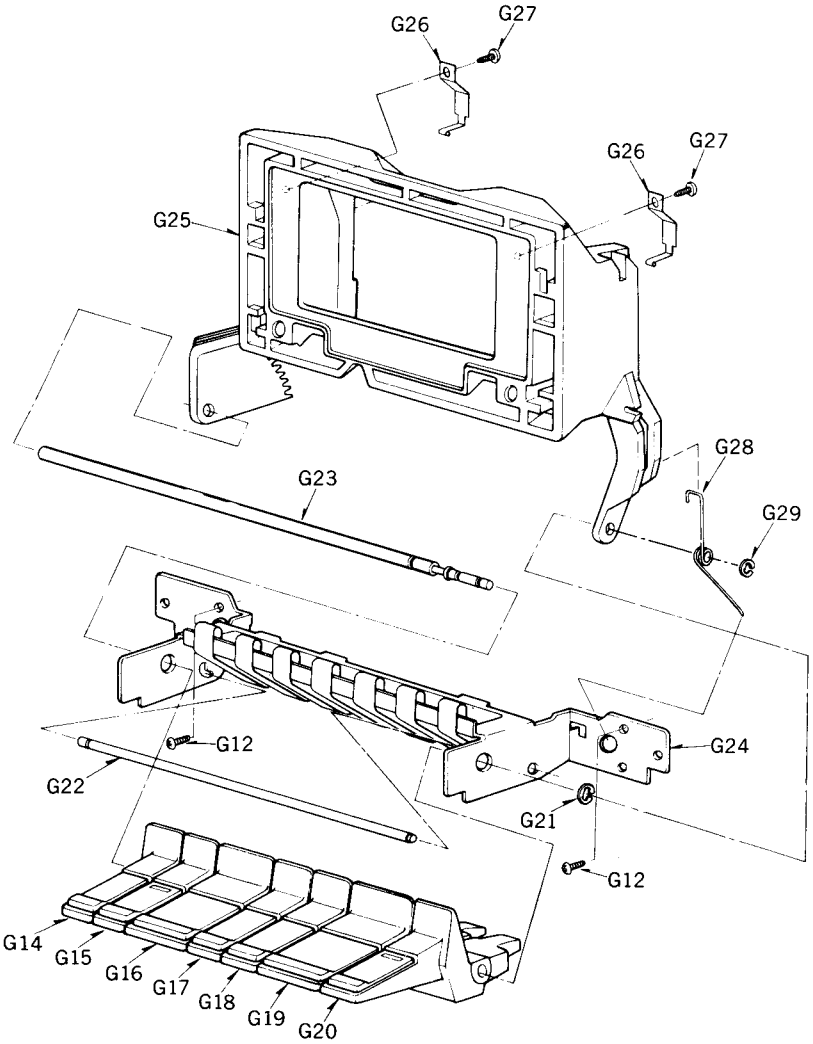

Ref. No.		Part No.	Part Name & Description
G17		QGO1577	Rewind Button
		"Silver Type"	
		QGO1590	"
		"Black Type"	
G18		QGO1576	Fast Forward Button
		"Silver Type"	
		QGO1589	"
		"Black Type"	
G19		QGO1575	Stop Button
		"Silver Type"	
		QGO1588	"
		"Black Type"	
G20		QGO1574	Eject Button
		"Silver Type"	
		QGO1587	"
		"Black Type"	
G21		XUC4FT	Stop Ring 4φ
G22		QMN1861	Push Button Shaft-B
G23		QMN2535	Push Button Shaft-A
G24		QXA0720	Push Button Holding Angle Assembly
G25		QKF6011	Cassette Holder
G26		QBP1818	Holder Spring
G27		XTN26+6B	Tapping Screw ∓2.6×6
G28		QBN1641	Lid Spring
G29		XUC3FT	Stop Ring 3φ
		ACCESSORIES	
A1	D	QQT2799	Instruction Book
※For All European areas except United Kingdom.			
	B	QQT2820	"
※For United Kingdom.			
		PACKINGS	
P1		QPN4006	Inside Carton
P2		QPA0516	Cushion
P3		XZB40X60A02	Poly Bag
P4		QPS0477	Pad
P5		QPS0432	Spacer

ARD Y.M D DK B

Printed in Japan.